Scissors lifts

Hidrotiltai
ADVANCED LOADING ASSISTANT

Scissors lifts

Produced in Lithuania

DESCRIPTION

Feature, advantage, and benefit statement about product .

scissor (hydraulic) lift – very versatile handling equipment. They can be used then store or other premises is in the same floor, as well as a match with level access. Lifts appliance are further widened when the hoist is equipped with a variety of platforms, rolgangs (rolgang may be self-propelled or power-operated). Scissors lift can be duplicated horizontally and vertically – and raised platform or plane, or height (possible lifting height up to 3.8 m). Our scissor lifts are manufactured by Bureau Veritas (Germany) quality certificate.

All lifts welded from steel S355.

MODELS

- With swing lip
- With tilting platform
- With rotating platform
- Platform with geared rollgang
- Platform for pallet lifting
- Vertical tandem scissors
- Vertical triplex scissors
- Horizontal tandem scissors
- With floating platform (logimat)
- Moveable scissors lift
- Scissors lifts with ramp function

CONTENT

1. CONTENT.....1 page
2. GALLERY.....2 PAGE
3. SCISSORS LIFTS 1.0-2.0 TONS STANDARD MODIFICATION.....3 PAGE
4. SCISSORS LIFTS 1.0-2.0 TONS WITH LIP .....4 PAGE
5. SCISSORS LIFTS 1.0-2.0 TONS WITH ROLLGANG.....5 PAGE
6. SCISSORS LIFTS WITH GEARED ROLLGANGS 0.5 –3.0 TON .....6 PAGE
7. SCISSORS LIFTS (WITH FLOATING PLATFORM) 0.5 –1.0 TON .....7 PAGE
8. SCISSORS LIFTS (MOVABLE VERSION) 0.5 –1.0 TON .....8 PAGE
9. SCISSORS LIFTS (TILTING PLATFORM MODEL) 1.0-2.0 TONS.....9 PAGE
10. SCISSORS LIFTS (ROTATING GEARED PLATFORM) 1.0-2.0 TONS.....10 PAGE
11. SCISSORS LIFTS (WITH HYDRAULIC BRIDGE) 10 TONS.....11 PAGE
12. SCISSORS LIFTS (HIGH CAPACITY) 10 TONS.....12 PAGE
13. SCISSORS LIFTS FOR DISABLED (ONE TANDEM)..... 13 PAGE
14. SCISSORS LIFTS (AUTOMOTIVE VERSION) 2.0-4.0 TONS.....14 PAGE
15. SCISSORS LIFTS WITH VERTICAL TANDEM 1.0 –2.0 TONS .....15 PAGE
16. SCISSORS LIFTS FOR DISABLED (VERTICAL TANDEM)..... 16 PAGE
17. SCISSORS LIFTS WITH VERTICAL TRIPLEX 1.0 –2.0 TONS .....17 PAGE
18. SCISSORS LIFTS WITH HORIZONTAL TANDEM 3 –5 TONS .....18 PAGE
19. TRUCK LIFTS.....19 PAGE
20. INTALATION SCHEME.....20 PAGE

Antakalnio Str. 75-805,
LT-10007 Vilnius, LITHUANIA
www.hidrotiltai.lt

Phone: +370 2340014
GSM: +370 655 40001
E-mail: info@hidrotiltai.lt

Hidrotiltai
ADVANCED LOADING ASSISTANT

Scissors lifts
Gallery

Produced in Lithuania

Antakalnio Str. 75-805,
LT-10007 Vilnius, LITHUANIA
www.hidrotiltai.lt

Phone: +370 2340014
GSM: +370 655 40001
E-mail: info@hidrotiltai.lt

Hidrotiltai
ADVANCED LOADING ASSISTANT

Scissors lifts
Sandard modification

Produced in Lithuania

AVAILABLE OPTIONS

- With swinging lip
- With rotating platform
- With tilting platform
- Platform with geared rollgang
- Optional color (standard RAL 3020).
- You company logo.

TECHNICAL SPECIFICATIONS

Made by standard (lifting platforms)	LST 1570-02-+A2
Capacity EN 1398 (kN)	15
Working pressure (MPa)	25
Working temperature ©	-25 …. +40
Oil	NESTE 32
Oil tank capacity (dm3)	8

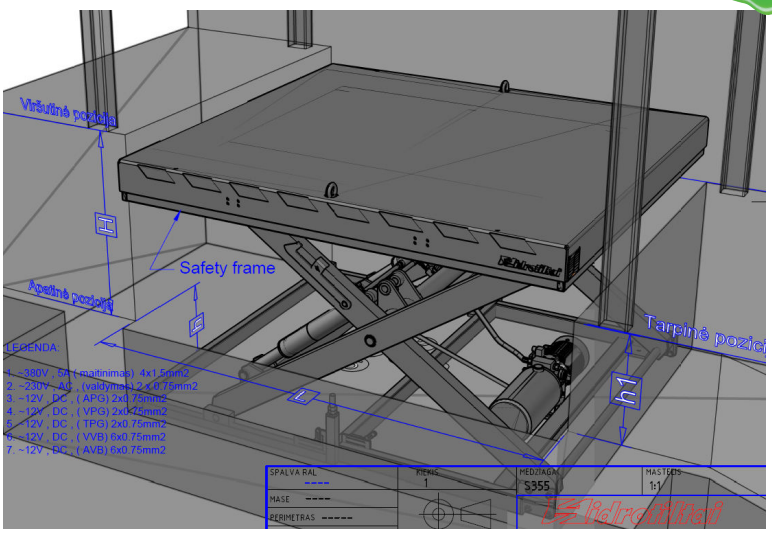

Model	Max point of rise	Min point of landing	Platform width	Platfom lenght	Stroke	Max load
	H (mm)	h (mm)	B(mm)	L(mm)	(H-h) (mm)	G(kg)
HS1_1.5x2.2_1.2	1650	450	1500	2200	1200	1000
HS2_2x3.2_1.9	2300	500	2000	3200	1900	2000

The scissor mechanism of common platform is mounted in the pot-hole, so it is convenient to put on loads or pick up a simple mechanical or automated trucks.

All profiles made form steel S355 , coated high class Tikkurila paint . All collection parts are zink coated.

Security :

Hydraulic hoses collected with security (antifall) valves. Pressure line installed with limit switch of lifting weight .

Operating beep sound.
Operating flash light.
Platform perimeter security frame.
Surface of platform made from rough steel leaf. (cicivisa).

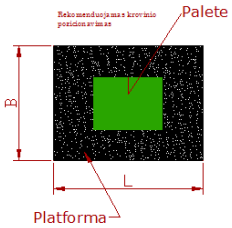

WIDE RANGE OF APPLICATION

- STORAGE SYSTEMS .
- PRODUCTION PLANTS.
- PARKING SYSTEMS.

ATTENTION: .please keep load possition as show in scheme

SERVICE LOCK HOOK

Antakalnio Str. 75-805,
LT-10007 Vilnius, LITHUANIA
www.hidrotiltai.lt

Phone: +370 2340014
GSM: +370 655 40001
E-mail: info@hidrotiltai.lt

Hidrotiltai
ADVANCED LOADING ASSISTANT

Scissors lifts
Loading capacity 1.0-2.0 tons

Produced in Lithuania

AVAILABLE OPTIONS

- With swinging lip
- With rotating platform
- With tilting platform
- Platform with geared rollgang
- Optional zink coated lift construction (Zn)
- You company logo.

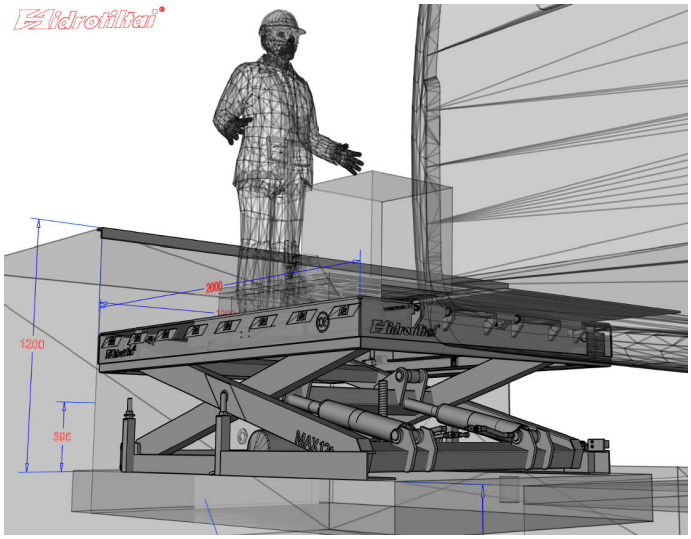

TECHNICAL SPECIFICATIONS

Made by standard (lifting platforms) -+A2	LST 1570-02
Capacity EN 1398 (kN)	15
Working pressure (MPa)	25
Working temperature ©	-25 …. +40
Oil	NESTE 32
Oil tank capacity (dm3)	8

Model	Max point of rise	Min point of landing	Platform width	Platfom lenght	Stroke	Max load
	H (mm)	h (mm)	B(mm)	L(mm)	(H-h) (mm)	G(kg)
HS1_1.5x2.2_1.2	1650	450	1500	2200	1200	1000
HS2_2x3.2_1.9	2300	500	2000	3200	1900	2000

LIP CONNECTION

Lip remove stairway and space between truck floor and lift platform and performs height compensation function.

Antakalnio Str. 75-805,
LT-10007 Vilnius, LITHUANIA
www.hidrotiltai.lt

Phone: +370 2340014
GSM: +370 655 40001
E-mail: info@hidrotiltai.lt

Hidrotiltai
ADVANCED LOADING ASSISTANT

Scissors lifts (platform with rollgangs)
Loading capacity 0.5-3.0 tons

Produced in Lithuania

AVAILABLE OPTIONS

- With swinging lip
- With rotating platform
- With tilting platform
- Platform with geared rollgang
- Optional color (standard RAL 1003).
- You company logo.

TECHNICAL SPECIFICATIONS

Made by standard (lifting platforms)	LST 1570-02-+A2
Capacity EN 1398 (kN)	30
Working pressure (MPa)	25
Working temperature ©	-25 …. +40
Oil	NESTE 32
Oil tank capacity (dm3)	8
Minimum working height (mm)	600
Maximum working height (mm)	1550
Platform stroke (mm)	950
Lifting power pack (W)	2200

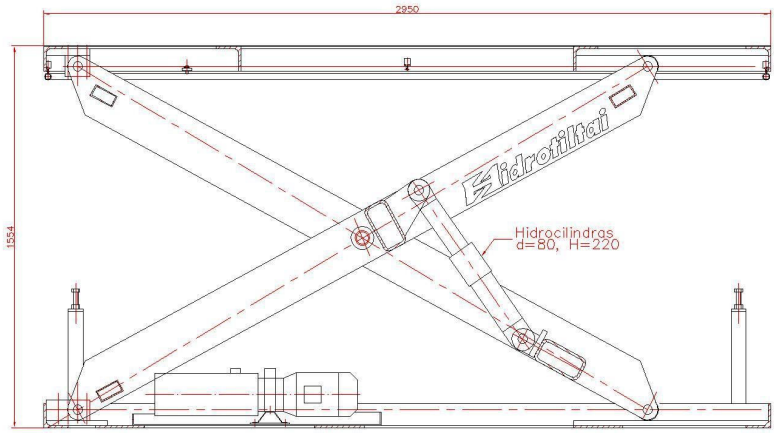

Lower position

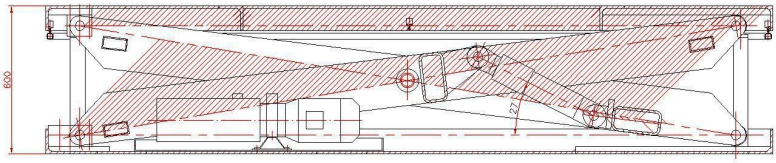

Application:

Greatly facilitates loading. Rollgang can be self– propelled or power—operated (geared).

Antakalnio Str. 75-805,
LT-10007 Vilnius, LITHUANIA
www.hidrotiltai.lt

Phone: +370 2340014
GSM: +370 655 40001
E-mail: info@hidrotiltai.lt

Hidrotiltai
ADVANCED LOADING ASSISTANT

Scissors lifts (platform with geared rollgangs)
Loading capacity 1-3.0 tons

Produced in Lithuania

AVAILABLE OPTIONS

- With swinging lip
- With rotating platform
- With tilting platform
- Platform with geared rollgang
- Optional color (standard RAL 1003).
- You company logo.

TECHNICAL SPECIFICATIONS

Made by standard (lifting platforms)	LST 1570-02-+A2
Capacity EN 1398 (kN)	20
Working pressure (MPa)	25
Working temperature ©	-25 …. +40
Oil	NESTE 32
Oil tank capacity (dm3)	6
Minimum working height (mm)	300
Maximum working height (mm)	1500
Platform stroke (mm)	1200
Rollgang speed (m/min)	10
Rollgang motor power (W)	550

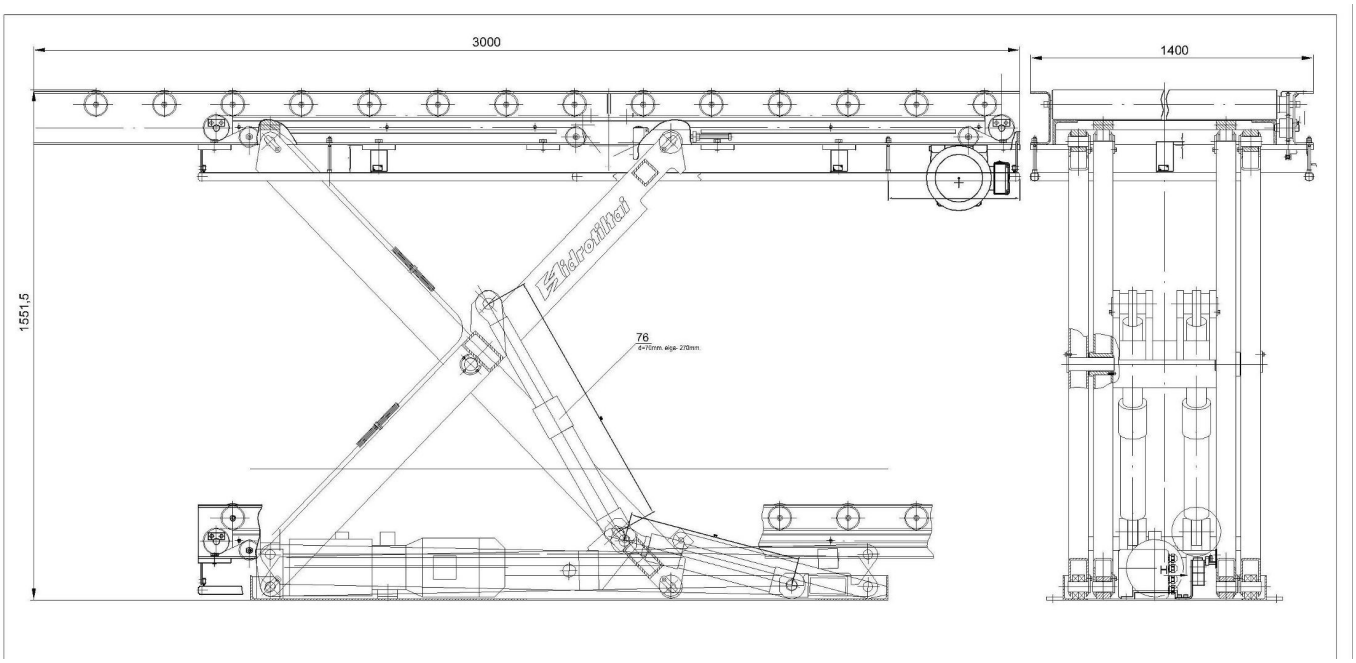

Application:

Greatly facilitates loading. Rollgang can be self– propelled or power—operated (geared).

Antakalnio Str. 75-805,
LT-10007 Vilnius, LITHUANIA
www.hidrotiltai.lt

Phone: +370 2340014
GSM: +370 655 40001
E-mail: info@hidrotiltai.lt

Hidrotiltai
ADVANCED LOADING ASSISTANT

Scissors lifts (with floating paltform)
Loading capacity 0.5-1.0 tons

Produced in Lithuania

AVAILABLE OPTIONS

- With rotating platform
- Platform with geared rollgang
- Optional color (standard RAL 1003).
- You company logo.

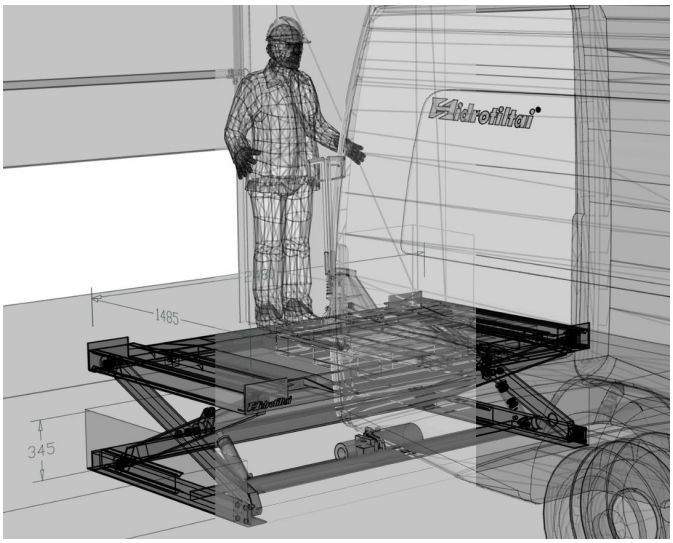

TECHNICAL SPECIFICATIONS

Made by standard (lifting platforms) -+A2	LST 1570-02
Capacity EN 1398 (kN)	15
Working pressure (MPa)	25
Working temperature ©	-25 …. +40
Oil	NESTE 32

HS	Max point of rise	Min point of landing	Platform width	Platfom lenght	Stroke	Max load
	H (mm)	h (mm)	U(mm)	L(mm)	(H-h) (mm)	G(kg)
LG0.5_1.5x2_1.2	1600	345	1500	2000	1255	500
LG1_1.8x2.2_1.2	1900	400	1800	2200	1500	1000

MODIFICATION LOGIMAT

This scissor lift model is designed to lift the load up to the load floor and automatically form the entry path. Since no trailer is parked in a very good way on the platform of the scissor lift (space remains), it is difficult to load or unload the cargo from / to the trailer. In this case, when the platelets rise to the level of the transport floor, it is automatically pushed into the inside of the trailer and lies on the floor, thereby forming a guaranteed connection between the hoist and the trailer. Since lifting cylinder valves are open during loading, the platform follows the changing level of the floor (working as a hydraulic ramp) when the trailer is raised or lowered, which is important for loading long trailers.

Antakalnio Str. 75-805,
LT-10007 Vilnius, LITHUANIA
www.hidrotiltai.lt

Phone: +370 2340014
GSM: +370 655 40001
E-mail: info@hidrotiltai.lt

Hidrotiltai
ADVANCED LOADING ASSISTANT

Scissors lifts (movable version)
Loading capacity 0.5-1.0 tons

Produced in Lithuania

AVAILABLE OPTIONS

- With swinging lip
- With rotating platform
- With tilting platform
- Platform with geared rollgang
- Optional color (standard RAL 1003).
- You company logo.

TECHNICAL SPECIFICATIONS

Made by standard (lifting platforms)	LST 1570-02-+A2
Capacity EN 1398 (kN)	15
Working pressure (MPa)	25
Working temperature ©	-25 …. +40
Oil	NESTE 32
Oil tank capacity (dm3)	4

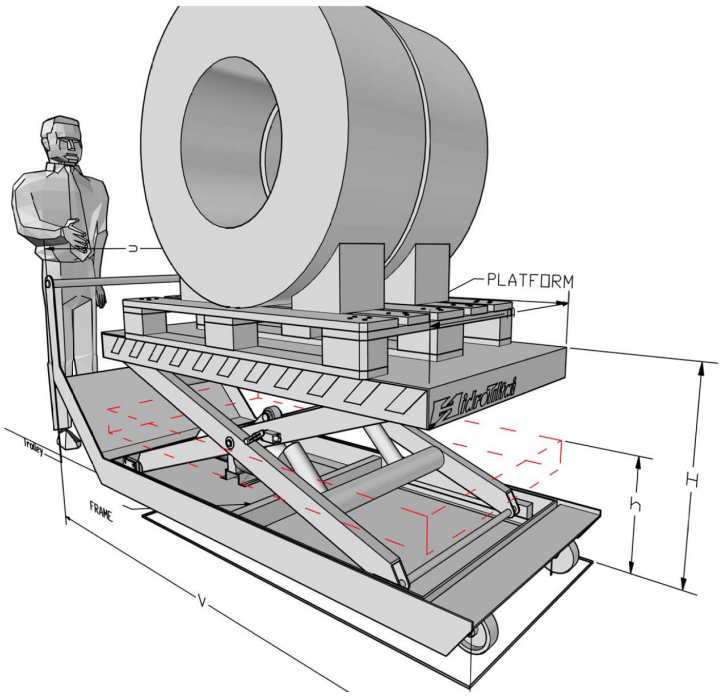

HS	Max point of rise	Min point of landing	Platform width	Platfom lenght	Stroke	Max load
	H (mm)	h (mm)	B(mm)	L(mm)	(H-h) (mm)	G(kg)
HSM0.5_0.8x1.8_1.2	1400	250	800	1800	1200	500
HSM1_1x2_1.5	1800	300	1000	2000	1500	1000

MODIFICATION MOBILE

Scissor Lift is used for transporting and lifting small loads at low heights. Suitable for repair workshops, where the repair units have to be taken from the transport and taken to the rack for transport to the warehouse. While it is good and that is mobile . Favorite repair shop , as well as products , goods shorting through the racks.

Antakalnio Str. 75-805,
LT-10007 Vilnius, LITHUANIA
www.hidrotiltai.lt

Phone: +370 2340014
GSM: +370 655 40001
E-mail: info@hidrotiltai.lt

Hidrotiltai
ADVANCED LOADING ASSISTANT

Scissors lifts (with tilting platform)
Loading capacity 0.5-2.0 tons

Produced in Lithuania

AVAILABLE OPTIONS

- With swinging lip
- With rotating platform
- With tilting platform
- Platform with geared rollgang
- Optional color (standard RAL 1003).
- You company logo.

TECHNICAL SPECIFICATIONS

Made by standard (lifting platforms)	LST 1570-02-+A2
Capacity EN 1398 (kN)	10
Working pressure (MPa)	25
Working temperature ©	-25 …. +40
Oil	NESTE 32
Oil tank capacity (dm3)	10
Lifting power pack (W)	1000

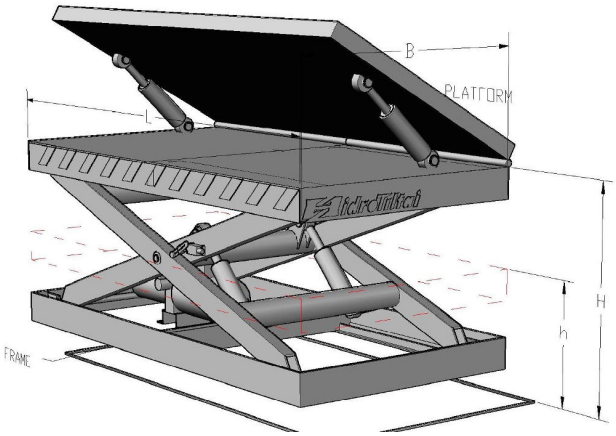

HS	Max point of rise	Min point of landing	Platform width	Platfom lenght	Stroke	Max load
	H (mm)	h (mm)	U(mm)	L(mm)	(H-h) (mm)	G(kg)
HST1_1.5x2_1.2	1500	300	1500	2000	1200	1000
HST2_2x2.5_1.8	2200	400	2000	2500	1800	2000

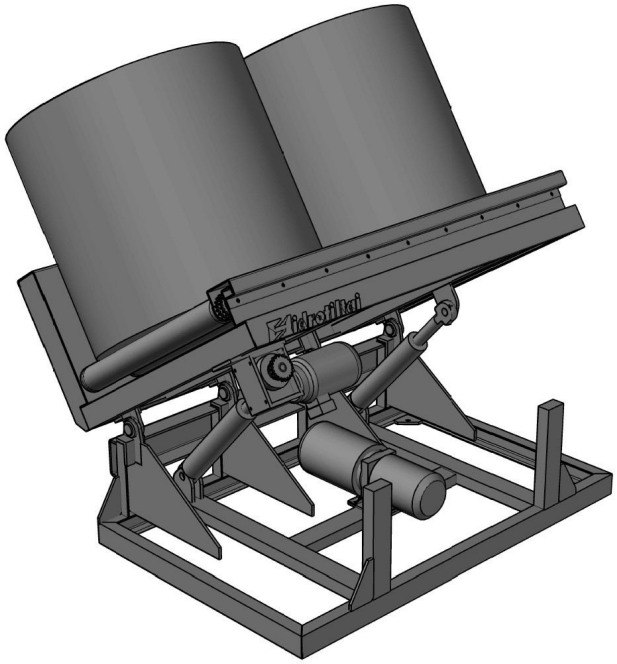

Application:

Convertible platform of lift is especially convenient when the load must not only lift , but also to make the desiredangle. Used in repair shops.
HIDROTILTAI scissor lift model with transformed platform uses: job control functions, positioning of goods.
Platform conversion can be done both automatically and individually.

Antakalnio Str. 75-805,
LT-10007 Vilnius, LITHUANIA
www.hidrotiltai.lt

Phone: +370 2340014
GSM: +370 655 40001
E-mail: info@hidrotiltai.lt

Hidrotiltai
ADVANCED LOADING ASSISTANT

Scissors lifts (with swivel platform)
Loading capacity 0.5-2.0 tons

Produced in Lithuania

AVAILABLE OPTIONS

- With swinging lip
- With rotating platform
- With tilting platform
- Platform with geared rollgang
- Optional color (standard RAL 1003).
- You company logo.

TECHNICAL SPECIFICATIONS

Made by standard (lifting platforms)	LST 1570-02-+A2
Capacity EN 1398 (kN)	10
Working pressure (MPa)	25
Working temperature ©	-25 …. +40
Oil	NESTE 32
Oil tank capacity (dm3)	10
Lifting power pack (W)	1000

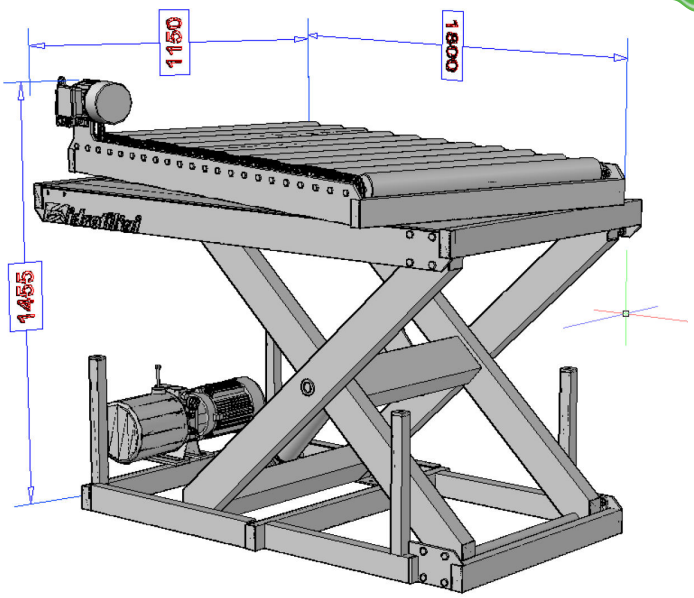

HS	Max point of rise	Min point of landing	Platform width	Platfom lenght	Stroke	Max load
	H (mm)	h (mm)	U(mm)	L(mm)	(H-h) (mm)	G(kg)
HS1S_1.15x1.8_1.2	1500	300	1150	1800	1200	1000
HS1.5S_2x2.5_1.8	2200	400	2000	2500	1800	1500

SCISSOR LIFT WITH SWIVEL PLATFORM

If the platform is still equipped with motorized rollers, this unit is also known as a rotation center and works with two or even three different levels and mounted in different directions.

Antakalnio Str. 75-805,
LT-10007 Vilnius, LITHUANIA
www.hidrotiltai.lt

Phone: +370 2340014
GSM: +370 655 40001
E-mail: info@hidrotiltai.lt

Hidrotiltai
ADVANCED LOADING ASSISTANT

Scissors lifts (with hydraulic bridge)
Loading capacity –10.0 tons

Produced in Lithuania

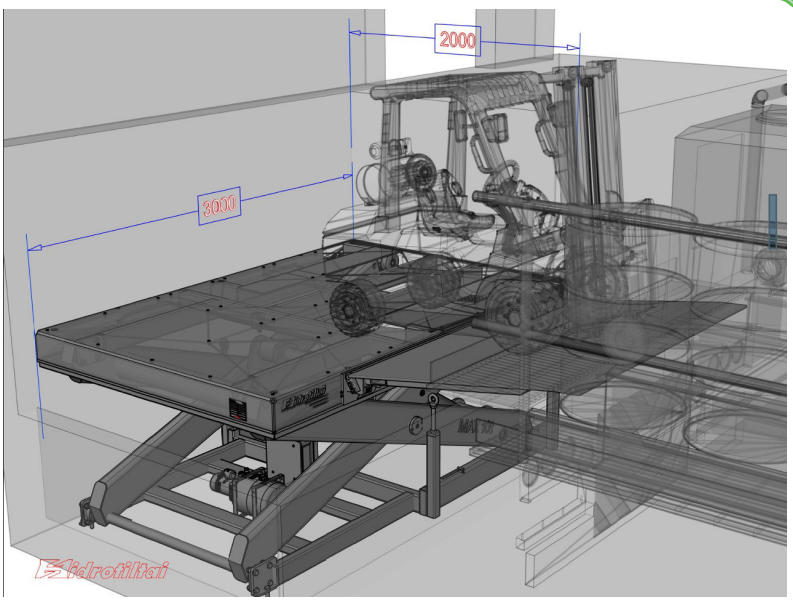

Model HS10T_2x3_1.5

Hydraulic scissor lift with hydraulic bridge for outdoor use.

Lift Platform Dimensions:	Width (m)	Length (m)
	2.0	3.0
Movement Speed:	Lifting (m / s)	Down (m / s)
	0.25	0.35

Lifting height (m) - 1.5

TECHNICAL SPECIFICATIONS

Made by standard (lifting platforms)	LST 1570-02-+A2
Capacity EN 1398 (kN)	100
Working pressure (MPa)	15
Working temperature ©	-25 …. +40
Oil	NESTE 32
Oil tank capacity (dm3)	50
Lifting power pack (W)	5500

Antakalnio Str. 75-805,
LT-10007 Vilnius, LITHUANIA
www.hidrotiltai.lt

Phone: +370 2340014
GSM: +370 655 40001
E-mail: info@hidrotiltai.lt

Hidrotiltai
ADVANCED LOADING ASSISTANT

Scissors lifts (high lifting capacity)
Loading capacity –10.0 tons

Produced in Lithuania

AVAILABLE OPTIONS

- With swinging lip
- With rotating platform
- With tilting platform
- Platform with geared rollgang
- Optional color (standard RAL 1003).
- You company logo.

TECHNICAL SPECIFICATIONS

Made by standard (lifting platforms) -+A2	LST 1570-02
Capacity EN 1398 (kN)	100
Working pressure (MPa)	25
Working temperature ©	-25 …. +40
Oil	NESTE 32
Oil tank capacity (dm3)	50
Lifting power pack (W)	7500

• Hydraulic scissor lift with high capacity, designed to operate at -30 degrees cold

Lift Platform Dimensions:	Width (m)	Length (m)
	2.2	5.2
Movement Speed :	Lifting (m / s)	Down (m / s)
	0.25	0.28

Lifting height (m) - 3.6

Lifting capacity (t) -10

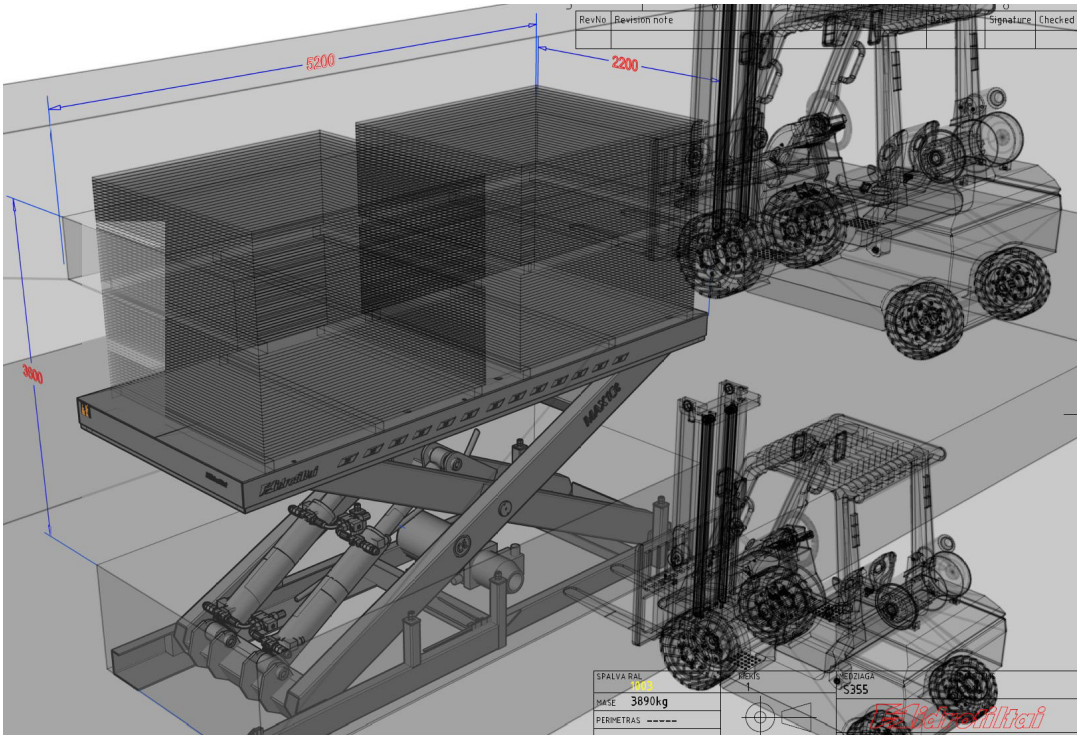

Antakalnio Str. 75-805,
LT-10007 Vilnius, LITHUANIA
www.hidrotiltai.lt

Phone: +370 2340014
GSM: +370 655 40001
E-mail: info@hidrotiltai.lt

Hidrotiltai
ADVANCED LOADING ASSISTANT

Scissors lifts (for disabled)
Loading capacity 0.15-0.45 tons

Produced in Lithuania

AVAILABLE OPTIONS

- With swinging lip
- Optional color (standard RAL 1003).
- You company logo.

TECHNICAL SPECIFICATIONS

Made by standard (lifting platforms)	LST 1570-02-+A2
Capacity EN 1398 (kN)	2.6
Working pressure (MPa)	25
Working temperature ©	-25 …. +40
Oil	NESTE 32
Oil tank capacity (dm3)	3
Lifting power pack (W)	550

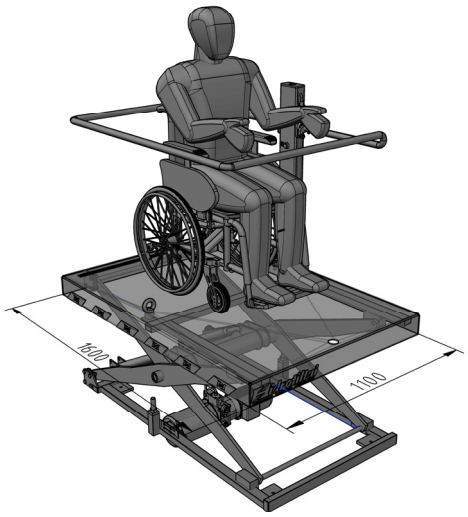

HS	Max point of rise	Min point of landing	Platform width	Platfom lenght	Stroke	Max load
	H (mm)	h (mm)	B(mm)	L(mm)	(H-h) (mm)	G(kg)
HSN0.26_1x1.5_1.2	1650	450	1000	1500	1200	260
HS0.45_1.2x2_1.8	2300	500	1200	2000	1800	450

Application: Vertical scissors—type lifts for disabled people are designed in such way—than lift went down , the whole structure have to hide in the pot– hole of all construnction. When the lift is not in use , the first floor window have no any obstruction because of lift design. Actuator is a hydraulic lift , and it works very gently and almoust silently (10dB).

Antakalnio Str. 75-805,
LT-10007 Vilnius, LITHUANIA
www.hidrotiltai.lt

Phone: +370 2340014
GSM: +370 655 40001
E-mail: info@hidrotiltai.lt

Hidrotiltai
ADVANCED LOADING ASSISTANT

Scissors lifts (automotive version)
Loading capacity 2.0-4.0 tons

Produced in Lithuania

AVAILABLE OPTIONS

- Optional color (standard RAL 1003).
- You company logo.

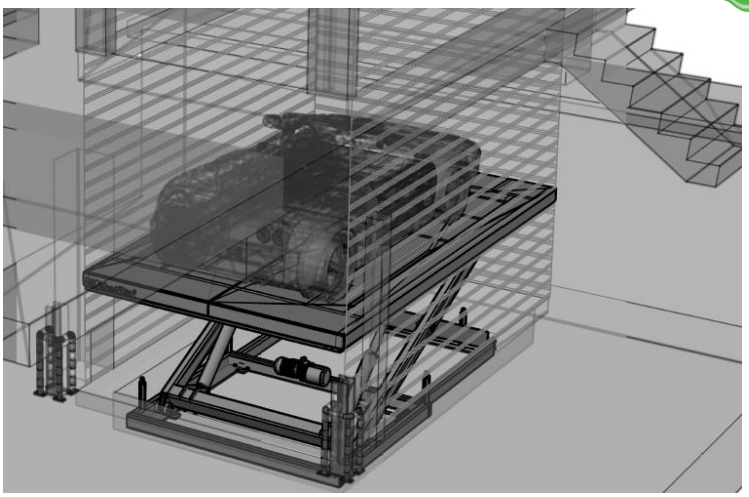

TECHNICAL SPECIFICATIONS

Made by standard (lifting platforms)	LST 1570-02-+A2
Capacity EN 1398 (kN)	40
Working pressure (MPa)	25
Working temperature ©	-25 …. +40
Oil	NESTE 32
Oil tank capacity (dm3)	30
Lifting power pack (W)	7500

Outdoor elevator operation.

Lift Platform Dimensions:	Width (m)	Length (m)
	3.3	5.4
Movement Speed:	Lifting (m / s)	Down (m / s)
	0.5	0.55

Lifting height (m) - 3.6

The lift is designed to lift / lower cars with a person. This model incorporates all the necessary safety systems (perimeter protection with photocells, uninterrupted power supply for 10 cycles, double gate lift protection for lower platform, etc.).

Antakalnio Str. 75-805,
LT-10007 Vilnius, LITHUANIA
www.hidrotiltai.lt

Phone: +370 2340014
GSM: +370 655 40001
E-mail: info@hidrotiltai.lt

Hidrotiltai
ADVANCED LOADING ASSISTANT

Scissors lifts (vertical tandem)
Loading capacity 1.0-2.0 tons

Produced in Lithuania

AVAILABLE OPTIONS

- With swinging lip
- With rotating platform
- With tilting platform
- Platform with geared rollgang
- Optional color (standard RAL 1003).
- You company logo.

TECHNICAL SPECIFICATIONS

Made by standard (lifting platforms) +A2	LST 1570-02-
Capacity EN 1398 (kN)	15
Working pressure (MPa)	25
Working temperature ©	-25 …. +40
Oil	NESTE 32

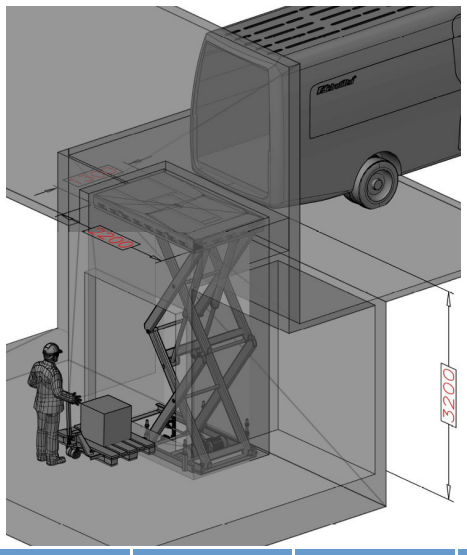

Model	Max point of rise	Min point of landing	Platform width	Platfom lenght	Stroke	Max load
	H (mm)	h (mm)	B(mm)	L(mm)	(H-h) (mm)	G(kg)
HS1.5V2_1.2x1.8_2.3	2800	500	1200	1800	2300	1500
HS2V2_1.3x2.2_3.2	3750	550	1300	2200	3200	2000

Technical application

The peculiarity of this model is that at a platform length of 2200mm, a lift height of 3200mm is achieved. Elevator for outdoor use.

Lift Platform Dimensions: Width (m) 1.3
Length (m) 2.2
Movement Speed Lifting (m / s) 0.15
Down (m / s) 0.12
Lifting height (m) - 3.2

ELECTRICAL SPECIFICATION

- Voltage (V) ~380
- Amperage (A) 4
- Power (W) 1500

IP55

Antakalnio Str. 75-805,
LT-10007 Vilnius, LITHUANIA
www.hidrotiltai.lt
Phone: +370 2340014
GSM: +370 655 40001
E-mail: info@hidrotiltai.lt

Hidrotiltai
ADVANCED LOADING ASSISTANT

Scissors lifts (vertical tandem) for disabled

Produced in Lithuania

AVAILABLE OPTIONS

- With swinging lip
- With rotating platform
- With tilting platform
- Platform with geared rollgang
- Optional color (standard RAL 1003).
- You company logo.

TECHNICAL SPECIFICATIONS

Made by standard (lifting platforms) +A2	LST 1570-02-
Capacity EN 1398 (kN)	15
Working pressure (MPa)	25
Working temperature ©	-25 …. +40
Oil	NESTE 32

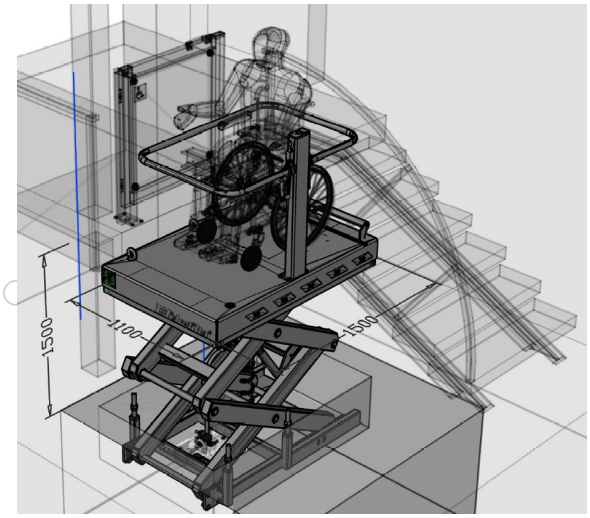

Model	Max point of rise	Min point of landing	Platform width	Platfom lenght	Stroke	Max load
	H (mm)	h (mm)	B(mm)	L(mm)	(H-h) (mm)	G(kg)
HSN0.2_1x1.5_1.17	1570	400	1000	1500	1170	200
HSN0.4_1.1x1.8_2.2	2650	450	1100	1800	2200	400

Model HSN0.2_1x1.5_1.17

Lift Platform Dimensions:

Width (m)	Length (m)
1	1.5

Movement Speed

Lifting (m / s)	Down (m / s)
0.15	0.1

Lifting height (m) - 1.17

ELECTRICAL SPECIFICATION

- Voltage (V) ~380
- Amperage (A) 4
- Power (W) 1500

IP55

Antakalnio Str. 75-805,
LT-10007 Vilnius, LITHUANIA
www.hidrotiltai.lt

Phone: +370 2340014
GSM: +370 655 40001
E-mail: info@hidrotiltai.lt

Hidrotiltai
ADVANCED LOADING ASSISTANT

Scissors lifts (vertical triplex)
Loading capacity 1.0-2.0 tons

Produced in Lithuania

AVAILABLE OPTIONS

- With swinging lip
- With rotating platform
- With tilting platform
- Platform with geared rollgang
- Optional color (standard RAL 1003).
- You company logo.

TECHNICAL SPECIFICATIONS

Made by standard (lifting platforms)	LST 1570-02-+A2
Capacity EN 1398 (kN)	15
Working pressure (MPa)	25
Working temperature ©	-25 …. +40
Oil	NESTE 32

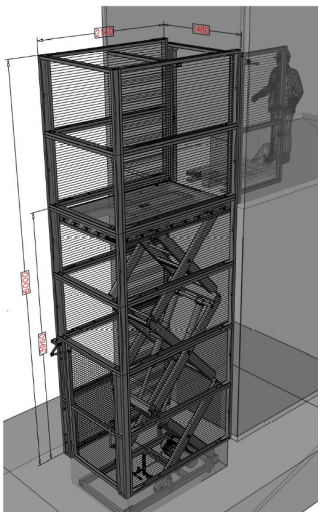

HS	Max point of rise	Min point of landing	Platform width	Platfom lenght	Stroke	Max load
	H (mm)	h (mm)	B(mm)	L(mm)	(H-h) (mm)	G(kg)
HS1V3_1.3x2_4	4500	500	1300	2000	4000	1000
HS1.5V3_1.5x2.5_4.2	4300	550	1500	2500	4200	1500

antifall valve.

TECHNICAL APPLICATION

The elevator is suitable for outdoor use.

Lift Platform Dimensions: Width (m) Length (m)

1.3

2.0

Movement Speed: Lifting (m / s) Down (m / s)

0.15

0.2

Lifting capacity 1000kg.
Lifting height (m) -4.0

Application:

Repeating lifting scissors three times in vertical direction , vertically lifting height can be increased up to 3.8 meters.

Antakalnio Str. 75-805,
LT-10007 Vilnius, LITHUANIA
www.hidrotiltai.lt

Phone: +370 2340014
GSM: +370 655 40001
E-mail: info@hidrotiltai.lt

Hidrotiltai ADVANCED LOADING ASSISTANT

Scissors lifts (horizontal tandem)
Loading capacity 3.0-5.0 tons

Produced in Lithuania

AVAILABLE OPTIONS

- With swinging lip
- With rotating platform
- With tilting platform
- Platform with geared rollgang
- Optional color (standard RAL 1003).
- You company logo.

TECHNICAL SPECIFICATIONS

Made by standard (lifting platforms)	LST 1570-02-+A2
Capacity EN 1398 (kN)	40
Working pressure (MPa)	25
Working temperature ©	-25 …. +40
Oil	NESTE 32
Oil tank capacity (dm3)	10
Lifting power pack (W)	2200

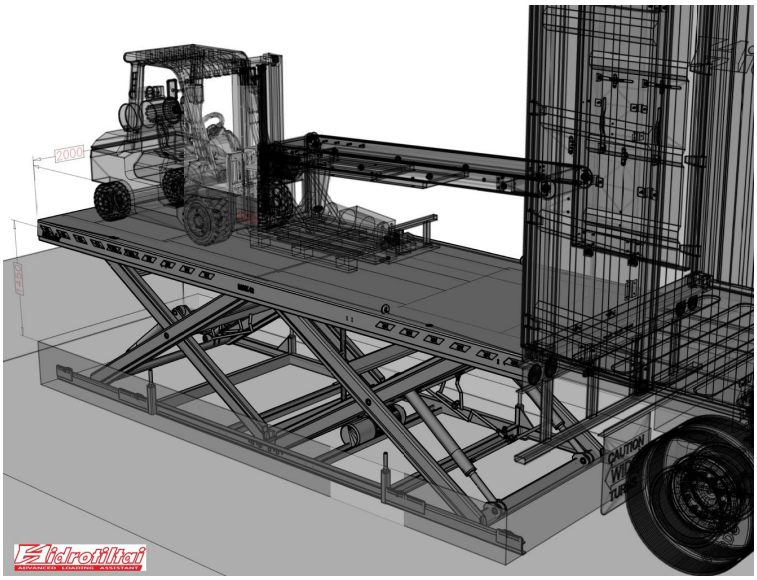

Models	Max point of rise	Min point of landing	Platform width	Platfom lenght	Stroke	Max load
	H (mm)	h (mm)	U(mm)	L(mm)	(H-h) (mm)	G(kg)
HS4TH_2x6_1.6	2100	500	2000	6000	1600	4000
HS4.3THR_1x5_1.5 (with geared rollgangs)	1900	300	1000	5000	1600	4300

Application:

When the lift scissors are duplicated in the horizontal direction the device obtain especially strong and is used when need a large capacity (up to 5 tons).

Antakalnio Str. 75-805,
LT-10007 Vilnius, LITHUANIA
www.hidrotiltai.lt

Phone: +370 2340014
GSM: +370 655 40001
E-mail: info@hidrotiltai.lt

Hidrotiltai
ADVANCED LOADING ASSISTANT

Truck lifts
Loading capacity 8.0-14.0 tons

Produced in Lithuania

TECHNICAL SPECIFICATIONS

Made by standard (lifting platforms)	LST 1570-02-+A2
Capacity EN 1398 (kN)	120
Working pressure (MPa)	12
Working temperature ©	-25 …. +40
Oil	NESTE 32
Oil tank capacity (dm3)	30
Lifting power pack (W)	7500

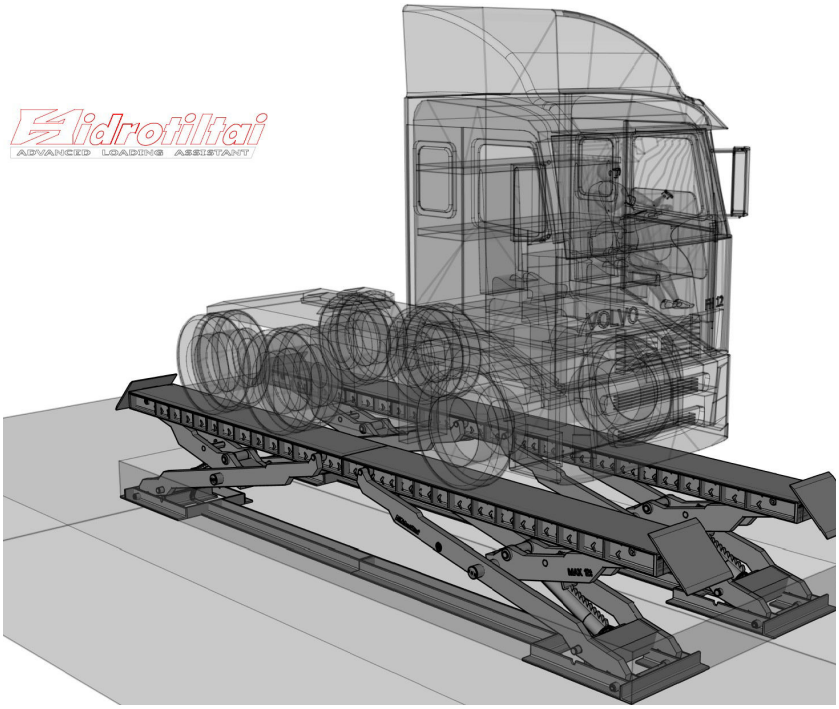

Truck Lift

Dimensions of the transport platform:
Width (m) 3.5 Length (m) 7.4

Lifting speed 0.35 m / s
Release speed 0.28m / s

Lifting capacity of 12 tons.

The lift is adapted for maintenance work. Mounted rails for repair caliper. Fitted with foot-pressure protection, hydraulic cut-off valves, rack rack system (additional mechanical protection for hydraulic guards). Complies with LST -EN-1570 + A2 Directive.

Antakalnio Str. 75-805,
LT-10007 Vilnius, LITHUANIA
www.hidrotiltai.lt

Phone: +370 2340014
GSM: +370 655 40001
E-mail: info@hidrotiltai.lt

Hidrotiltai
ADVANCED LOADING ASSISTANT

Scissors lifts
preparing for installation

Produced in Lithuania

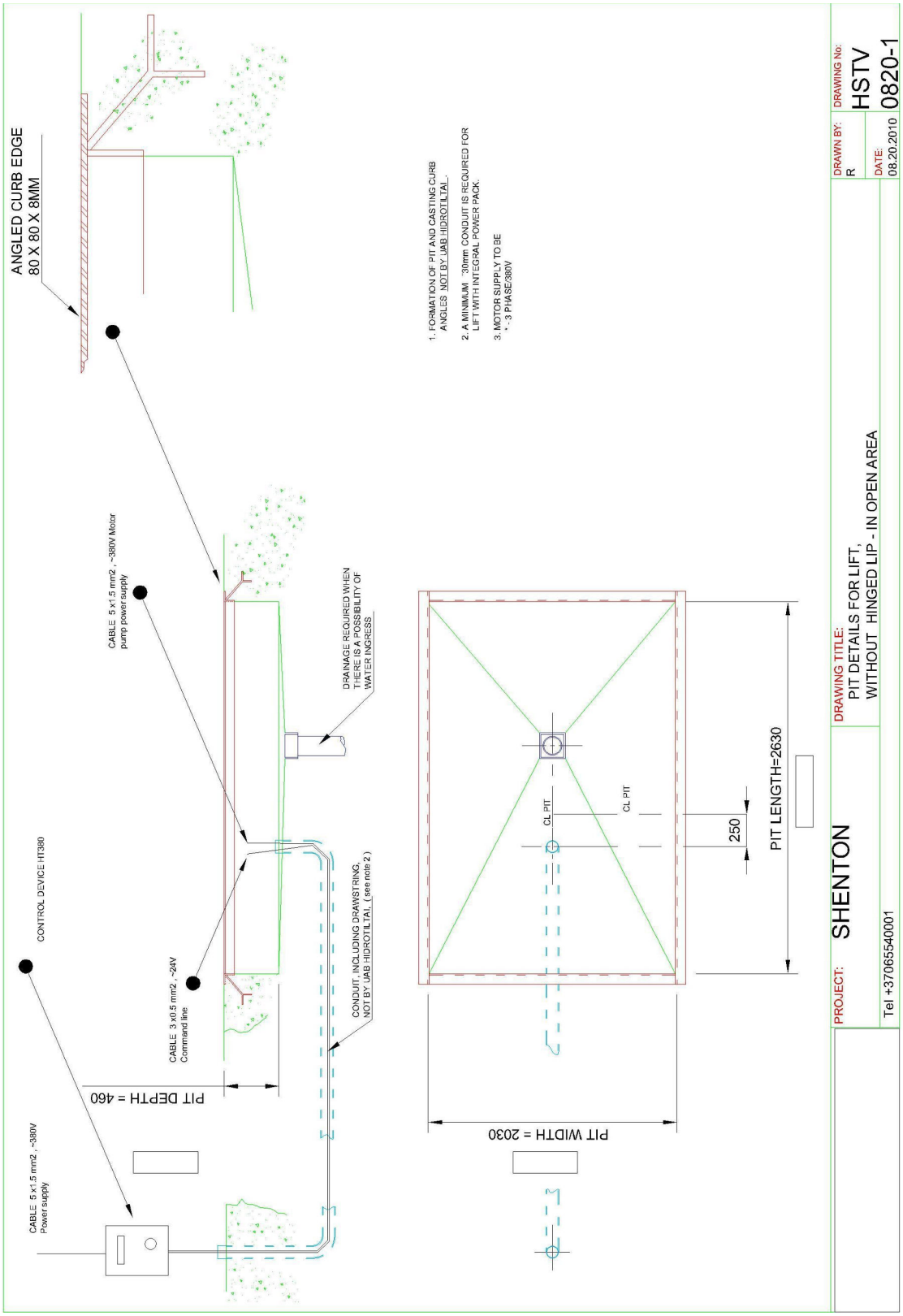

Antakalnio Str. 75-805,
LT-10007 Vilnius, LITHUANIA
www.hidrotiltai.lt

Phone: +370 2340014
GSM: +370 655 40001
E-mail: info@hidrotiltai.lt

Hidrotiltai
ADVANCED LOADING ASSISTANT

Scissors lifts

Produced in Lithuania

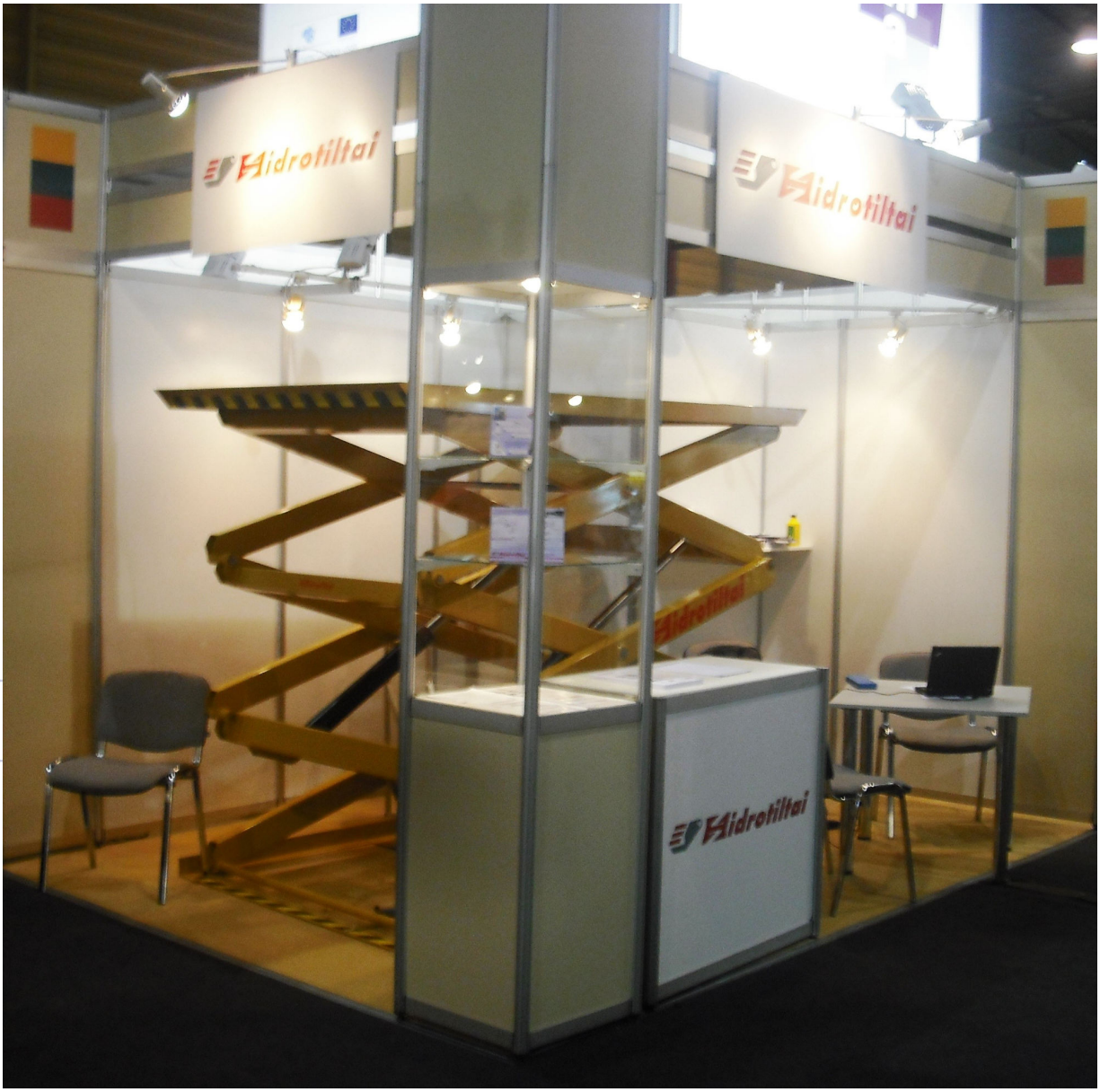

Antakalnio Str. 75-805,
LT-10007 Vilnius, LITHUANIA
www.hidrotiltai.lt

Phone: +370 2340014
GSM: +370 655 40001
E-mail: info@hidrotiltai.lt

Hidrotiltai
ADVANCED LOADING ASSISTANT